markilux 1650

Excellent design and well-thought-out mechanics

Enjoy more of the evening – with integrated halogen spotlights

rated to wind resistance class 2 (corresponds to Beaufort 5)

PRODUCT DESIGN AWARD

side view
with awning retracted,
face fixture

side view
with awning retracted,
top fixture

side view
at a pitch of 50°

corrosion-resistant
and technically proven;
twin steel-link chains
at the elbow joints

wall sealing profile
(optional), effective
up to a maximum
awning pitch of 15°

front profile
with integrated
halogen light
sources – adjustable
vertically through 90°

folding arms
with bionic tendon
(optional)

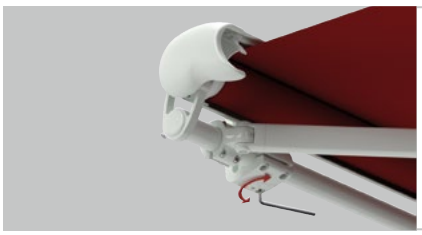

pitch adjustment via
the fixture brackets

Design Features

presented with the IF Design Award for excellent design

folding-arm awning in a semi-cassette version; the dynamically rounded coverboard gives the awning the appearance of being fully cassetted

elegant and robust front profile made of aluminium

Technical Specification

the warm lighting of the adjustable halogen spotlights integrated into the front profile provides for a wonderful atmosphere on the patio – even when the awning is closed

coverboard with integrated brush, so that larger pieces of dirt and debris cannot be drawn into the awning

sturdy, round steel torque bar, 50 mm Ø, to prevent twist and deflection

the 85 mm roller tube ensures the highest stiffness and the best possible cover winding characteristics even at the largest widths

Optional Accessories

radio-controlled motor with radio remote control for ease of use

hard-wired motor operation (optionally with automatic weather controls) for straightforward and easy operation

a dimmer allows you to adjust the lighting level and therefore the atmosphere yourself

in the case of manual operation it is supplied with a markilux stainless steel winding handle – quality to get to grips with

in the case of manual operation ease of use is ensured with the spring-assisted gearbox

wall sealing profile to cover the gap between awning and wall

awning available in non-standard RAL colours

Lounge colours

markilux 1650

off-white textured finish 5233

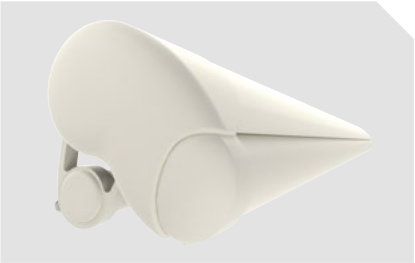

stone grey metallic 5215

Havanna brown textured finish 5229

anthracite metallic 5204

Designer end caps in polished chrome

off-white textured finish 5233

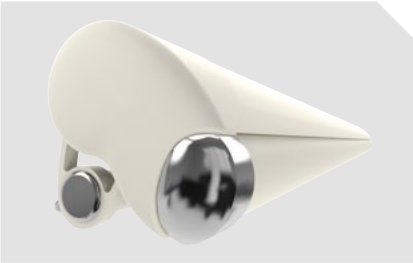

stone grey metallic 5215

Havanna brown textured finish 5229

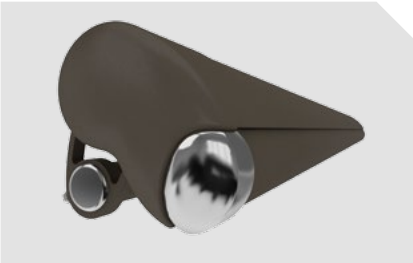

anthracite metallic 5204

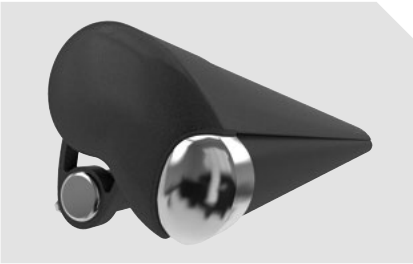

Colours may differ slightly from those depicted in both hue and finish.

Dimensions and configuration options

		M										M min.		
		260	310	360	410	460	510	560	610	660	710[1]			
		174 — 260	261 — 310	311 — 360	361 — 410	411 — 460	461 — 510	511 — 560	561 — 610	611 — 660	661 — 710			
H	150	2)										204	661	204
	200	2)										248	661	254
	250	–	2)									298	661	304
	300	–	–	2)								348	661	354
	350	–	–	–	2)							398	661	404
	400[1]	–	–	–	–	2)				–		437	687	–

dimensions in cm

= 2 = 2 1 = 3 2

1) awnings with 3 arms or a projection of 400 cm are only available with motor

2) please note the minimum widths!

Operation / Drive

	standard	optional
manual operation	✓	—
servo-assisted operation	—	✓
hard-wired motor	—	✓
io radio controls	—	✓
radio-controlled motor (433 MHz)	—	✓

Coupled units

	standard	optional
2 fields	—	✓ 3)
junction roller	—	✓ 4)

3) for minimum widths please consult the section "Technical Information"

4) see overview "Bracket fixture range"

Covers

	fabric range no.	standard	optional
sunsilk snc	324 .. / 328 .. / 369 ..	✓	—
sunsilk perla FR	374 ..	—	✓
sunvas snc	310 .. / 311 .. 313 .. — 315 ..	✓	—
sunvas perla	370 ..	—	✓

Dimensions and tolerances

	width	projection
housing tolerances	+5 / −15 mm	±40 mm
awning cover width = awning width	– 260 mm	
awning cover length = awning projection		+180 mm

= motor

= no. of folding arms

= no. of brackets

= manual operation

= no. of bespoke arms

= no. of rolltex bearings

M = awning width

M min. = minimum widths

H = projection

Frame colours

		standard	optional
traffic white	RAL 9016	☐	
metallic aluminium	RAL 9006	☐	
grey brown, similar to	RAL 8019	☐	
light ivory	RAL 1015	☐	
anthracite metallic	5204	☐	
stone grey metallic	5215	☐	
off-white textured finish	5233	☐	
Havanna brown textured finish	5229	☐	
non-standard powder-coated finish			☐

Other end cap colour options

	standard	optional
polished chrome		☐

Miscellaneous

	standard	optional
halogen spotlights	☑	–
bionic tendon	–	☑
wall sealing profile	–	☑ 1)
light and wind sensor	–	☑
insertable side blind	–	☑
infrared heater	–	☑
vibrabox / radio control light sensor Sunis WireFree	–	☑

1) up to a maximum awning pitch of 15°

Additional information

The width of the awning cover is always **less** than that of the awning. Please refer cover sizes in the case of coupled units and those with more than 2 arms to us.

Pitch adjustment range:
from 5° to 50° (to the horizontal).

Definition of projection:
Please consult the section “Technical Information”.

In the case of manual operation approximately **16 winding handle revolutions can be assumed per metre of awning projection.**

It takes approximately **12 seconds per metre** to extend the awning in the case of **motor-driven units**.

Coupled folding-arm awnings are available up to a **max. of 2 single units** side by side, however **only with a motor.**

A coupled unit is available with **junction roller**. Pattern repeat mismatches are possible in the case of junction roller covers.

A junction roller may not fit when the projection is the maximum for the width of each awning. (see also the section on “Installation”, the arm separation table).

If coupled awnings are fitted into a **recess or reveal** the overall width of the coupled awning must be at least 6 cm less than the width of the opening to allow the awning to be coupled.

Colours similar to those in the RAL chart. Colours may differ slightly from those depicted in both hue and finish.

Fixtures, fittings and accessories

Fixture brackets

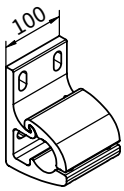

face fixture bracket assembly

100 mm

70867.

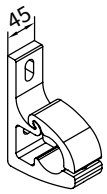

face fixture bracket assembly

45 mm

71813.

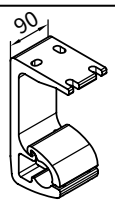

top fixture bracket assembly

90 mm

70868.

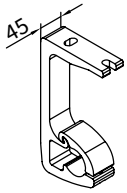

top fixture bracket assembly

additional bracket for 3 folding arms

45 mm

71818.

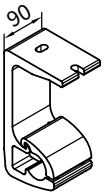

top fixture bracket assembly

for central fixture

90 mm

70869.

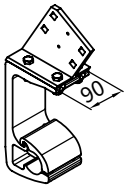

eaves fixture bracket assembly complete set

height of flat plate: 150 mm

90 mm

70871.

Spreader and spacer plates

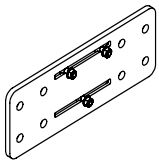

spreader plate A face fixture

160 × 430 × 12 mm

75326.

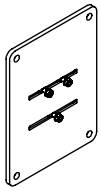

spreader plate B face fixture

300 × 400 × 12 mm

75325.

spacer plate for face fixture 45 × 150 × 20 mm

N.B! max. stacking height = 200 mm
1)

718251

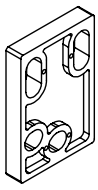

spacer plate for face fixture 100 × 150 × 20 mm

N.B! max. stacking height = 200 mm
1)

718231

spacer plate for face fixture 100 × 150 × 12 mm

1)

718241

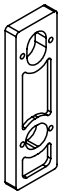

spacer plate for face fixture 45 × 150 × 12 mm

1)

71826.

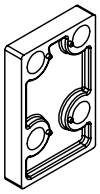

spacer plate for face fixture 90 × 140 × 20 mm

N.B! max. stacking height = 200 mm
1)

716311

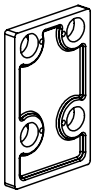

spacer plate for top fixture 90 × 140 × 12 mm

1)

716411

spacer plate for top fixture 45 × 140 × 12 mm

1)

716371

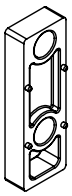

spacer plate for top fixture 45 × 140 × 20 mm

N.B! max. stacking height = 200 mm
1)

716261

1) please refer to the section "Technical Information"

. = insert RAL colour code no

Stand-off brackets

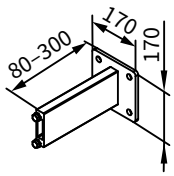

stand-off bracket
for face fixture bracket
71813.

1)

77967.

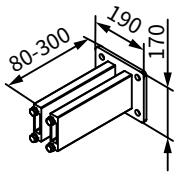

stand-off bracket
for face fixture bracket
70867.

1)

77968.

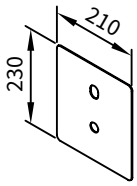

cover plate
for installation with
spacer plates and
tand-off brackets in
the case of external
insulation
210 × 230 × 2 mm
1)

71844.

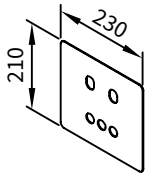

cover plate
for installation with
spacer plates and
stand-off brackets in
the case of external
insulation
230 × 210 × 2 mm
1)

71843.

Accessories

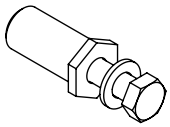

reducing bolt assembly
M 16 → M 12 / SW 27
50 mm in length

1)

753891

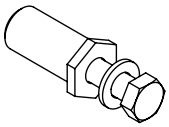

reducing bolt assembly
M 16 → M 10 / SW 27
50 mm in length

1)

754921

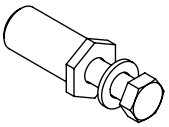

reducing bolt assembly
M 12 → M 10 / SW 27
50 mm in length

1)

754911

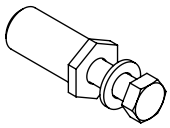

reducing bolt assembly
M 10 → M 10 / SW 27
50 mm in length

1)

754901

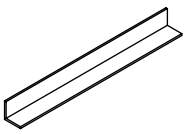

angled profile
eaves fixture bracket
100 × 100 mm

available by the metre,
not pre-drilled
793800 = machine finish

79380.

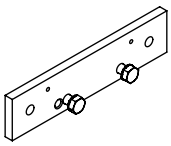

spreader / backing plate
assembly eaves fixture
60 × 260 × 12 mm

(please refer to “Eaves
fixture with spreader /
backing plate”)

75383.

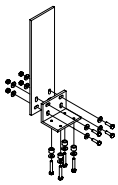

flat plate and angled
bracket for eaves fixture

not pre-drilled
machine finish

716620

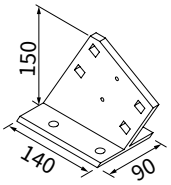

eaves fixture bracket

height of flat plate:
150 mm

71612.

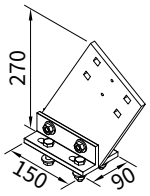

eaves fixture bracket
assembly
height of flat plate:
approx. 270 mm

(please refer to “Eaves
fixture with spreader /
backing plate”)

71659.

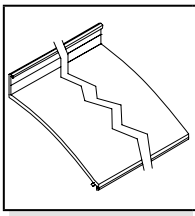

wall sealing profile
available by the metre

for installation example
please refer to “Face
fixture with wall sealing
profile”

77780.

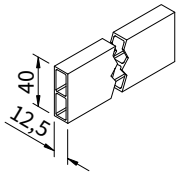

stand-off strip
for wall sealing profile
available by the metre

for installation example
please refer to “Face
fixture with wall sealing
profile”

751971

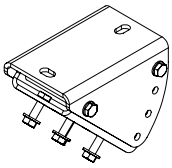

adjustable eaves fixture
bracket assembly

(see “Installation using
adjustable eaves fixture
bracket”)

71198.

1) please refer to the section “Technical Information”

. = insert RAL colour code no

Face fixture

Pull-out force [N=Newton] per upper fixing point according to EN 13561, wind resistance class 2

compression-proof substrate

H [cm] \ M [cm]	260	310	360	410	460	510	560	610	660	710
	FB [N]									
150	529	608	686	765	843	922	1000	1079	1157	870
200	802	922	1043	1163	1284	1404	1524	1645	1765	1327
250	–	1335	1505	1676	1846	2016	2186	2357	2808	2110
300	–	–	1998	2226	2454	2682	3212	3512	2771	2831
350	–	–	–	2850	3521	3858	4195	4532	4869	3652
400	–	–	–	–	4406	4829	5253	5677	–	4572

HT | BHT	2 | 100 mm	2 | 100 mm 1 | 45 mm	3 | 100 mm 1 | 45 mm
BM	6	8	11

non compression-proof substrate

H [cm] \ M [cm]	260	310	360	410	460	510	560	610	660	710
	FB [N]									
150	724	831	938	1045	1153	1260	1367	1474	1582	1190
200	1096	1260	1425	1590	1754	1919	2083	2248	2413	1813
250	–	1824	2057	2290	2523	2755	2988	3221	3838	2884
300	–	–	2731	3043	3354	3666	4444	4799	5154	3869
350	–	–	–	3894	4812	5272	5733	6194	6654	4990
400	–	–	–	–	6021	6600	7179	7758	–	6248

HT | BHT	2 | 100 mm	2 | 100 mm 1 | 45 mm	3 | 100 mm 1 | 45 mm
BM	6	8	11

The pull-out force refers to the vertical centre to centre measurement between the fixture points of **90 mm.** If this measurement is reduced to the minimum, the pull-out force increases by **14%** in the case of **compression-proof substrates** and by **19%** in the case of **non compression-proof substrates**.

M = awning width
H = projection
FB = pull-out force per fixing point
HT | BHT = bracket quantity | width
BM = no. of fixing points
WA = wall sealing profile
71813. = face fixture bracket assembly 45 mm
70867. = face fixture bracket assembly 100 mm

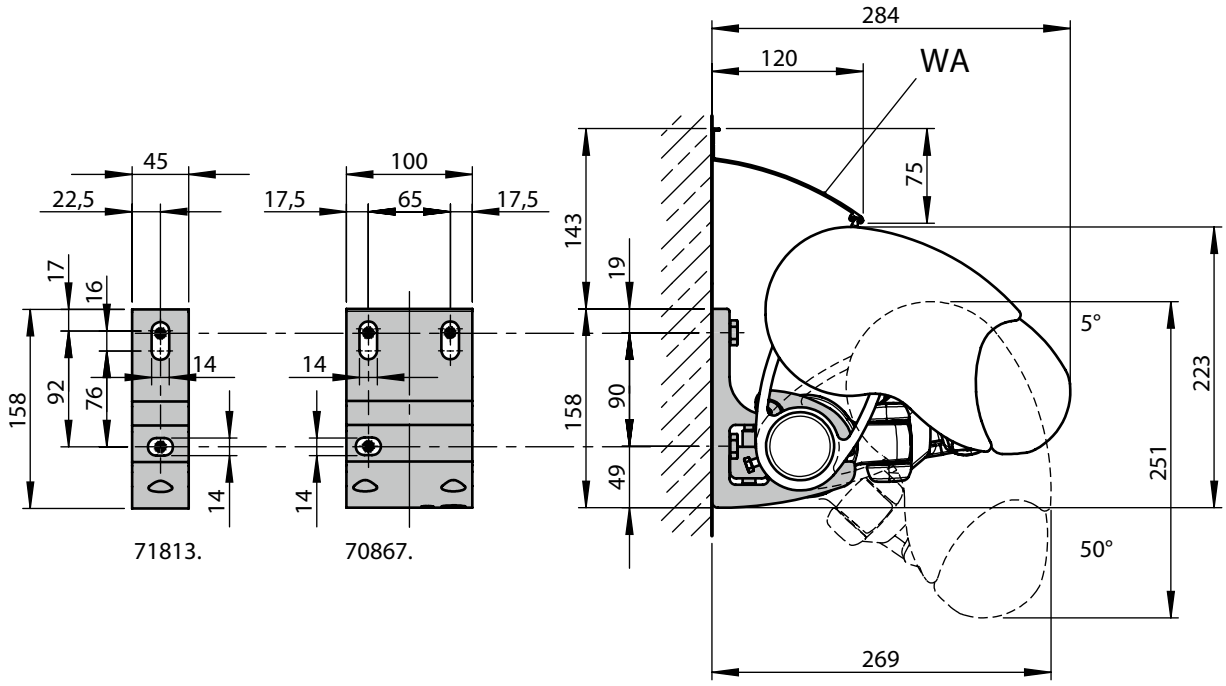

dimensions in mm

Face fixture with spreader plate A

Pull-out force [N=Newton] per upper fixing point according to EN 13561, wind resistance class 2

compression-proof substrate

H [cm] \ M [cm]	260	310	360	410	460	510	560	610	660	710
	FB [N]									
150	305	350	395	441	486	531	576	621	667	501
200	461	530	599	668	738	807	876	945	1014	762
250	–	766	864	961	1059	1157	1254	1352	1611	1211
300	–	–	1145	1276	1407	1537	1864	2013	2162	1623
350	–	–	–	1632	2016	2209	2403	2596	2789	2091
400	–	–	–	–	2522	2764	3007	3249	–	2617

HT | BHT	2 | 100 mm	2 | 100 mm 1 | 45 mm	3 | 100 mm 1 | 45 mm
BP	2	2	3
DP	—	1	1
BM	16	18	26

non compression-proof substrate

H [cm] \ M [cm]	260	310	360	410	460	510	560	610	660	710
	FB [N]									
150	434	498	562	626	690	755	819	883	947	712
200	655	753	851	950	1048	1146	1245	1343	1441	1083
250	–	1089	1227	1366	1505	1644	1783	1921	2290	1721
300	–	–	1628	1813	1999	2185	2649	2860	3072	2306
350	–	–	–	2319	2866	3140	3414	3688	3963	2972
400	–	–	–	–	3583	3928	4273	4617	–	3719

HT | BHT	2 | 100 mm	2 | 100 mm 1 | 45 mm	3 | 100 mm 1 | 45 mm
BP	2	2	3
DP	—	1	1
BM	16	18	26

The pull-out force refers to the vertical centre to centre measurement between the fixture points of **76 mm**.
In the case of spreader plates a washer conforming to DIN 9021 must be used.

M = awning width
H = projection
FB = pull-out force per fixing point
HT | BHT = bracket quantity | width
BP = no. of spreader plates
DP = no. of spacer plates
BM = no. of fixing points
WA = wall sealing profile
75197. = stand-off strip for wall sealing profile

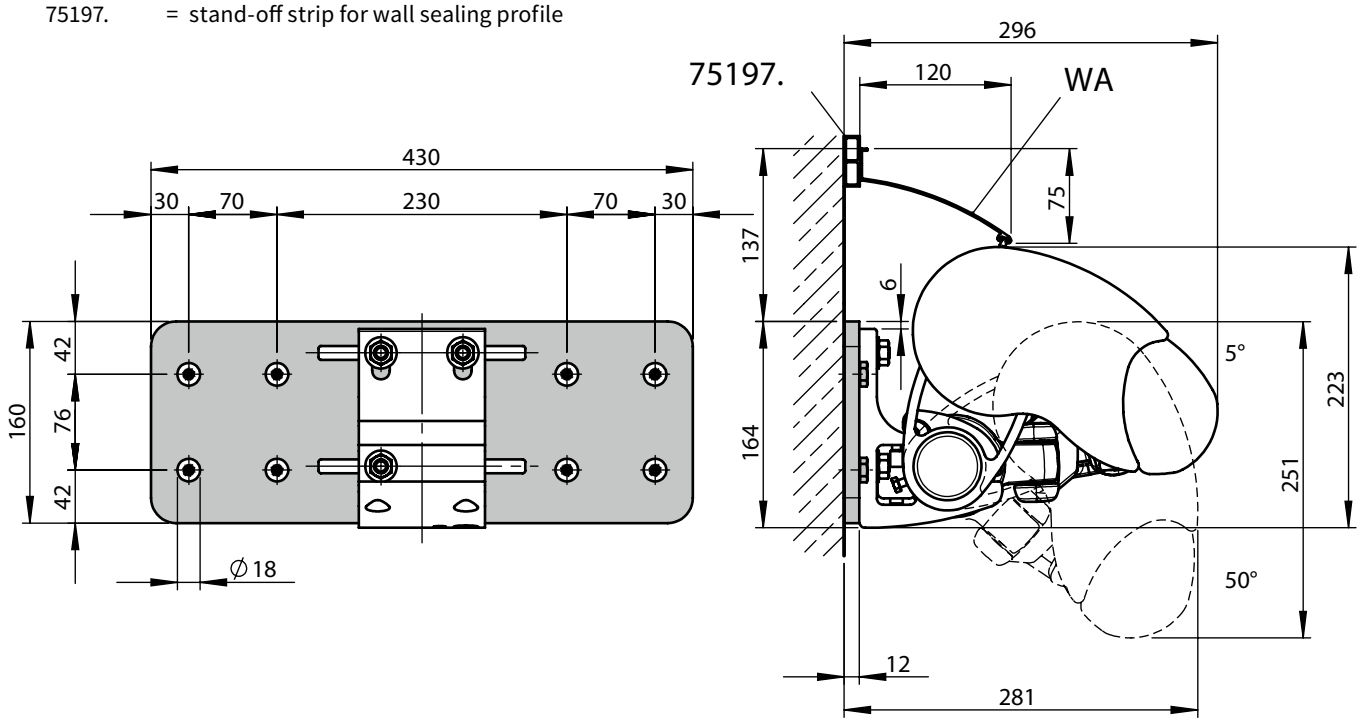

dimensions in mm

Face fixture with spreader plate B

Pull-out force [N=Newton] per upper fixing point according to EN 13561, wind resistance class 2

	compression-proof substrate										***non compression-proof*** substrate									
	M [cm]										**M [cm]**									
	260	310	360	410	460	510	560	610	660	710	260	310	360	410	460	510	560	610	660	710
H [cm]	**FB [N]**										**FB [N]**									
150	181	207	234	261	287	314	341	368	394	297	188	216	244	272	300	328	356	383	411	309
200	273	314	355	396	436	477	518	559	600	451	284	327	370	412	455	498	541	583	626	470
250	–	453	511	569	627	685	742	800	954	717	–	473	533	593	654	714	774	834	994	747
300	–	–	678	755	832	910	1103	1191	1279	960	–	–	707	787	868	949	1150	1242	1334	1001
350	–	–	–	966	1193	1308	1422	1536	1650	1238	–	–	–	1007	1244	1364	1483	1602	1721	1291
400	–	–	–	–	1492	1636	1779	1923	–	1549	–	–	–	–	1556	1706	1856	2005	–	1615

HT | BHT	2 | 100 mm	2 | 100 mm 1 | 45 mm	3 | 100 mm 1 | 45 mm	2 | 100 mm	2 | 100 mm 1 | 45 mm	3 | 100 mm 1 | 45 mm
BP	2	2	3	2	2	3
DP	—	1	1	—	1	1
BM	8	10	14	8	10	14

The pull-out force refers to the vertical centre to centre measurement between the fixture points of **350 mm**.
In the case of spreader plates a washer conforming to DIN 9021 must be used.

M = awning width
H = projection
FB = pull-out force per fixing point
HT | BHT = bracket quantity | width
BP = no. of spreader plates
DP = no. of spacer plates
BM = no. of fixing points

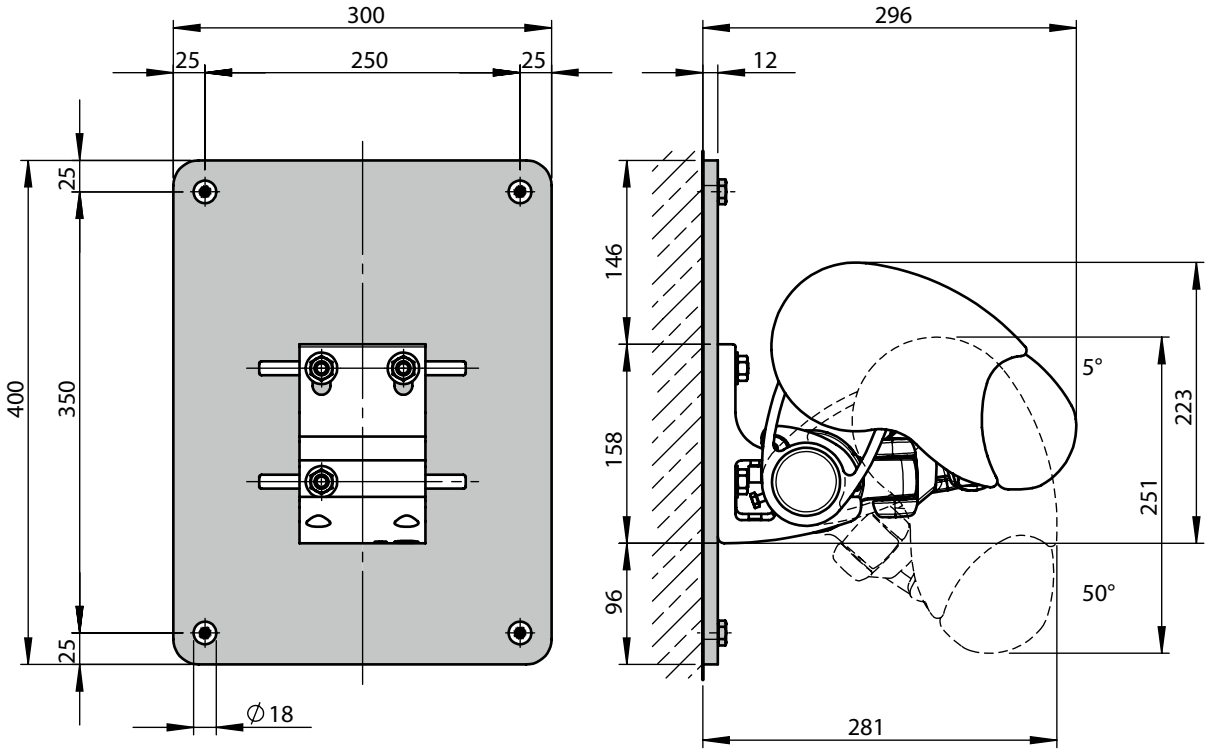

dimensions in mm

Face fixture with stand-off brackets

Pull-out force [N=Newton] per upper fixing point according to EN 13561, wind resistance class 2

	compression-proof substrate										***non compression-proof*** substrate									
	M [cm]										**M [cm]**									
	260	310	360	410	460	510	560	610	660	710	260	310	360	410	460	510	560	610	660	710
H [cm]	**FB [N]**										**FB [N]**									
150	626	717	808	899	990	1082	1173	1264	1355	1022	704	806	909	1012	1114	1217	1319	1422	1525	1150
200	900	1034	1168	1301	1435	1569	1703	1836	1970	1484	1013	1163	1314	1464	1615	1765	1916	2066	2216	1669
250	–	1450	1633	1817	2000	2184	2367	2550	3049	2294	–	1631	1837	2044	2250	2456	2663	2869	3430	2581
300	–	–	2118	2358	2598	2839	3450	3725	4000	3005	–	–	2382	2653	2923	3194	3881	4190	4500	3381
350	–	–	–	2965	3671	4021	4372	4722	5073	3808	–	–	–	3336	4130	4524	4918	5313	5707	4284
400	–	–	–	–	4529	4964	5399	5834	–	4701	–	–	–	–	5095	5584	6074	6563	–	5288

HT | BHT	2 | 100 mm	2 | 100 mm 1 | 45 mm	3 | 100 mm 1 | 45 mm	2 | 100 mm	2 | 100 mm 1 | 45 mm	3 | 100 mm 1 | 45 mm
DH 77968.	2	2	3	2	2	3
DH 77967.	—	1	1	—	1	1
BM	8	12	16	8	12	16

The pull-out force refers to the vertical centre to centre measurement between the fixture points of **120 mm**.
In the case of stand-off brackets washers conforming to DIN 9021 must be used.

M = awning width
H = projection
FB = pull-out force per fixing point
HT | BHT = bracket quantity | width
BM = no. of fixing points
DH = no. of stand-off brackets
77967. = stand-off bracket for face fixture bracket assembly 70813.
77968. = stand-off bracket for face fixture bracket assembly 70867.

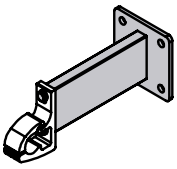

77967.

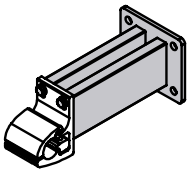

77968.

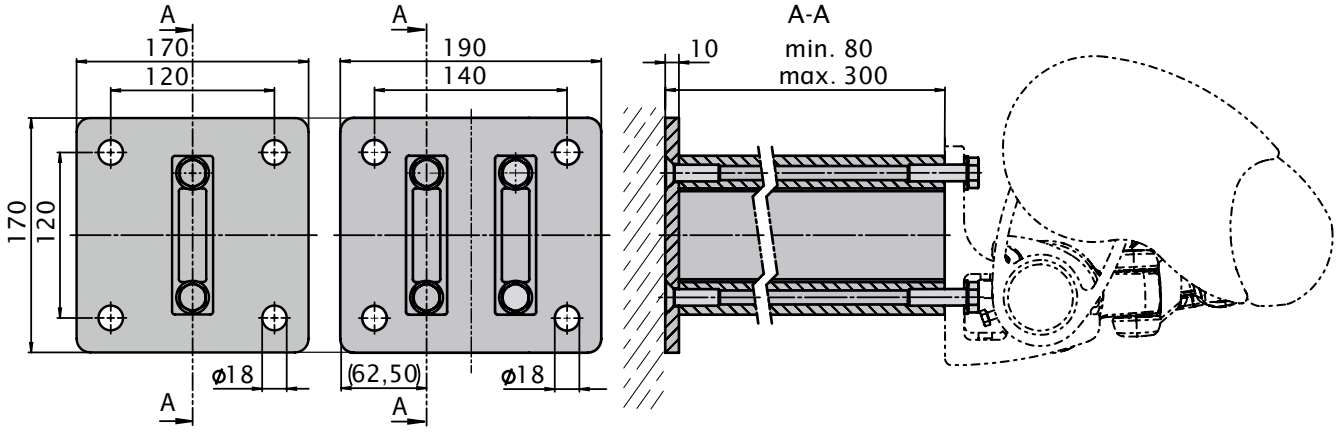

dimensions in mm

Top fixture

Pull-out force [N=Newton] per upper fixing point according to EN 13561, wind resistance class 2

compression-proof substrate

H [cm] \ M [cm]	260	310	360	410	460	510	560	610	660	710
	FB [N]									
150	685	790	894	999	1103	1207	1312	1416	1521	1197
200	1004	1158	1311	1465	1619	1772	1926	2079	2233	1731
250	–	1641	1853	2065	2277	2489	2701	2913	3455	2650
300	–	–	2431	2711	2990	3270	3949	4266	4583	3494
350	–	–	–	3441	4239	4647	5054	5461	6186	4455
400	–	–	–	–	5276	5785	6294	6803	–	5533

HT | BHT	2 | 90 mm	2 | 90 mm 1 | 45 mm	3 | 90 mm 1 | 45 mm
BM	8	10	14

non compression-proof substrate

H [cm] \ M [cm]	260	310	360	410	460	510	560	610	660	710
	FB [N]									
150	879	1012	1145	1279	1412	1545	1678	1811	1944	1516
200	1298	1495	1693	1891	2088	2286	2484	2682	2879	2217
250	–	2130	2404	2679	2953	3227	3502	3776	4483	3422
300	–	–	3163	3526	3889	4252	5139	5551	5964	4530
350	–	–	–	4484	5528	6059	6590	7120	8068	5792
400	–	–	–	–	6888	7553	8217	8881	–	7207

HT | BHT	2 | 90 mm	2 | 90 mm 1 | 45 mm	3 | 90 mm 1 | 45 mm
BM	8	10	14

The pull-out force refers to the horizontal centre to centre measurement between the fixture points of **80 mm.**
If the awning is fixed with 2 brackets per folding arm, the pull-out force can be halved.
Place the brackets immediately to the left and right of the arm bearer.

M = awning width
H = projection
FB = pull-out force per fixing point
HT | BHT = bracket quantity | width
BM = no. of fixing points
70868. = top fixture bracket assembly 90 mm
71818. = top fixture bracket assembly 45 mm

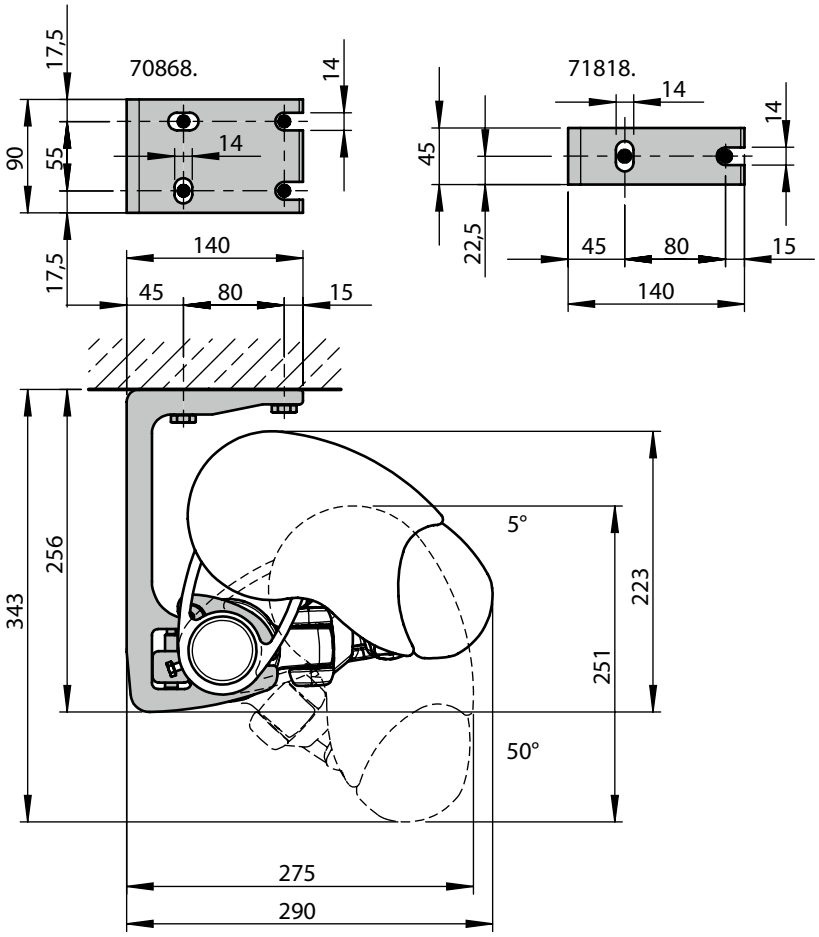

dimensions in mm

Eaves fixture

Torque [Nm = Newton metres] for the fixture bracket in the immediate vicinity of the arm, shear force [N = Newton] per fixing point according to EN 13561, wind resistance class 2

	Torque M [cm]										Shear force M [cm]									
	260	310	360	410	460	510	560	610	660	710	260	310	360	410	460	510	560	610	660	710
H [cm]	Md [Nm]										FS [N]									
150	130	150	169	188	207	227	246	265	285	214	1577	1817	2056	2296	2535	2775	3014	3254	3493	2734
200	197	227	256	286	316	345	375	405	434	326	2321	2676	3030	3384	3738	4093	4447	4801	5155	3981
250	–	328	370	412	454	496	538	580	691	519	–	3804	4294	4785	5275	5766	6256	6747	8006	6124
300	–	–	492	548	604	660	800	864	928	696	–	–	5642	6290	6939	7587	9168	9903	10639	8093
350	–	–	–	701	866	949	1032	1115	1265	898	–	–	–	7994	9853	10800	11746	12692	14380	10336
400	–	–	–	–	1084	1188	1292	1397	–	1125	–	–	–	–	12272	13455	14639	15822	–	12852
HT	2					3			4		2					3			4	
BM	8					12			16		8					12			16	

The shear force is calculated on the basis of 2 fixing points per bracket, because – depending on the roof pitch – it cannot be guaranteed that 4 fixing points per bracket can used.

M = awning width
H = projection
Md = torque value for the bracket in the immediate vicinity of the arm
HT = no. of brackets
FS = shear force
BM = no. of fixing points

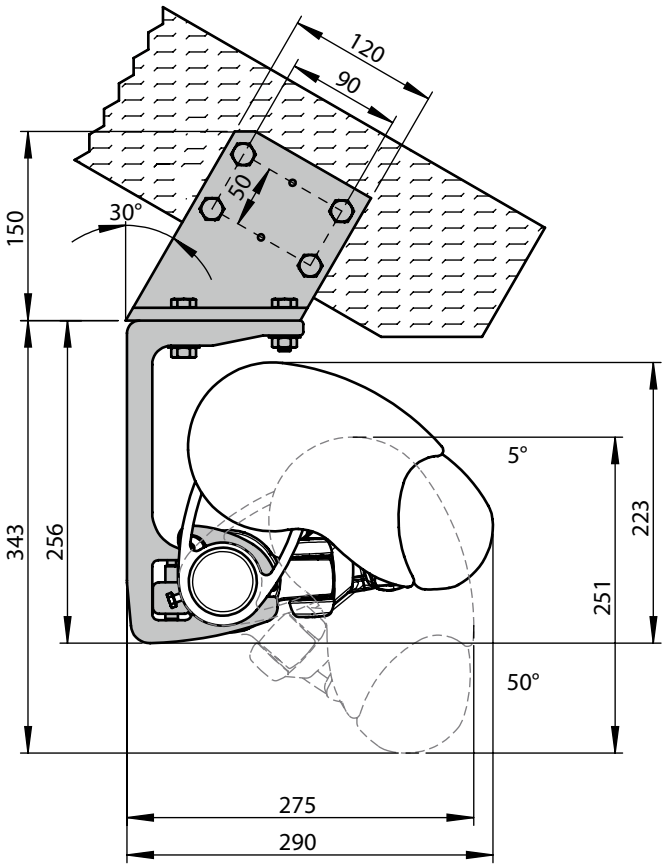

dimensions in mm

Eaves fixture with additional spreader / backing plate

Torque [Nm = Newton metres] for the fixture bracket in the immediate vicinity of the arm, shear force [N = Newton] per fixing point according to EN 13561, wind resistance class 2

	Torque										Shear force									
	M [cm]										M [cm]									
	260	310	360	410	460	510	560	610	660	710	260	310	360	410	460	510	560	610	660	710
H [cm]	Md [Nm]										FS [N]									
150	130	150	169	188	207	227	246	265	285	214	781	903	1024	1146	1267	1389	1510	1632	1754	1426
200	197	227	256	286	316	345	375	405	434	326	1116	1289	1462	1636	1809	1982	2155	2328	2501	1987
250	–	328	370	412	454	496	538	580	691	519	–	1797	2031	2266	2500	2735	2969	3204	3784	2951
300	–	–	492	548	604	660	800	864	928	696	–	–	2638	2943	3249	3554	4279	4624	4969	3837
350	–	–	–	701	866	949	1032	1115	1265	898	–	–	–	3710	4561	5000	5440	5879	6653	4846
400	–	–	–	–	1084	1188	1292	1397	–	1125	–	–	–	–	5649	6195	6741	7288	–	5978
HT	2					3			4		2					3			4	
BM	4					6			8		4					6			8	

By using the additional flat fixture plate, the shear force is reduced in comparison with conventional eaves fixture.

M = awning width
H = projection
Md = torque value for the bracket in the immediate vicinity of the arm
HT = no. of brackets
FS = shear force
BM = no. of fixing points

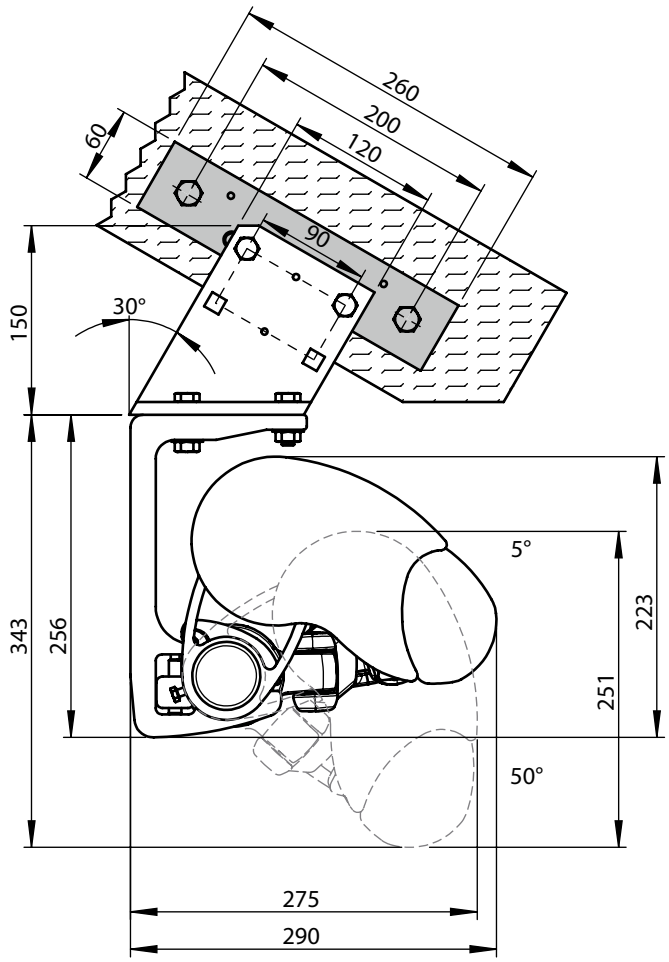

dimensions in mm

Installation using the adjustable eaves fixture bracket

Pull-out force [N=Newton] per upper fixing point according to EN 13561, wind resistance class 2

	compression-proof substrate										***non compression-proof*** substrate									
	M [cm]										**M [cm]**									
	260	310	360	410	460	510	560	610	660	710	260	310	360	410	460	510	560	610	660	710
H [cm]	**FB [N]**										**FB [N]**									
150	1028	1186	1345	1503	1661	1819	1977	2135	2293	1832	1060	1223	1386	1549	1712	1875	2038	2201	2364	1884
200	1490	1720	1949	2178	2408	2637	2866	3096	3325	2606	1539	1775	2012	2249	2485	2722	2959	3195	3432	2686
250	–	2420	2734	3048	3362	3675	3989	4303	5094	3935	–	2501	2825	3149	3473	3798	4122	4446	5264	4063
300	–	–	3570	3982	4394	4806	5796	6262	6728	5158	–	–	3691	4117	4543	4968	5994	6475	6957	5330
350	–	–	–	5039	6203	6800	7397	7994	9051	6550	–	–	–	5212	6417	7034	7651	8268	9362	6771
400	–	–	–	–	7704	8448	9192	9936	–	8112	–	–	–	–	7971	8741	9510	10280	–	8389
HT | BHT	2 | 90 mm					2 | 90 mm 1 | 45 mm			3 | 90 mm 1 | 45 mm		2 | 90 mm					2 | 90 mm 1 | 45 mm			3 | 90 mm 1 | 45 mm	
BM	8					10			14		8					10			14	

The pull-out force refers to the measurement from the front to the rear fixture points of **140 mm**.

Washers conforming to DIN 9021 must be used.

M = awning width
H = projection
FB = pull-out force per fixing point

HT | BHT = bracket quantity | width
BM = no. of fixing points

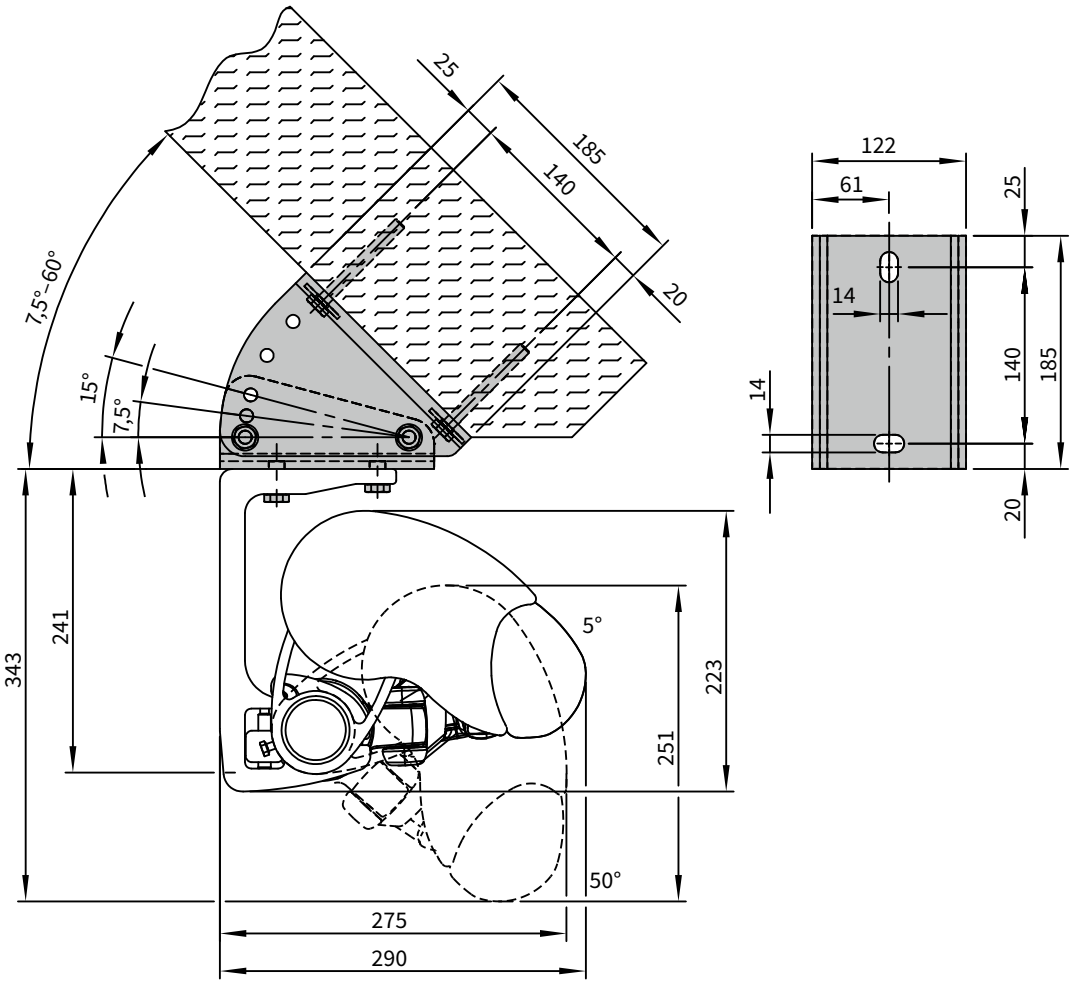

dimensions in mm

Installation dimensions at varying awning pitches

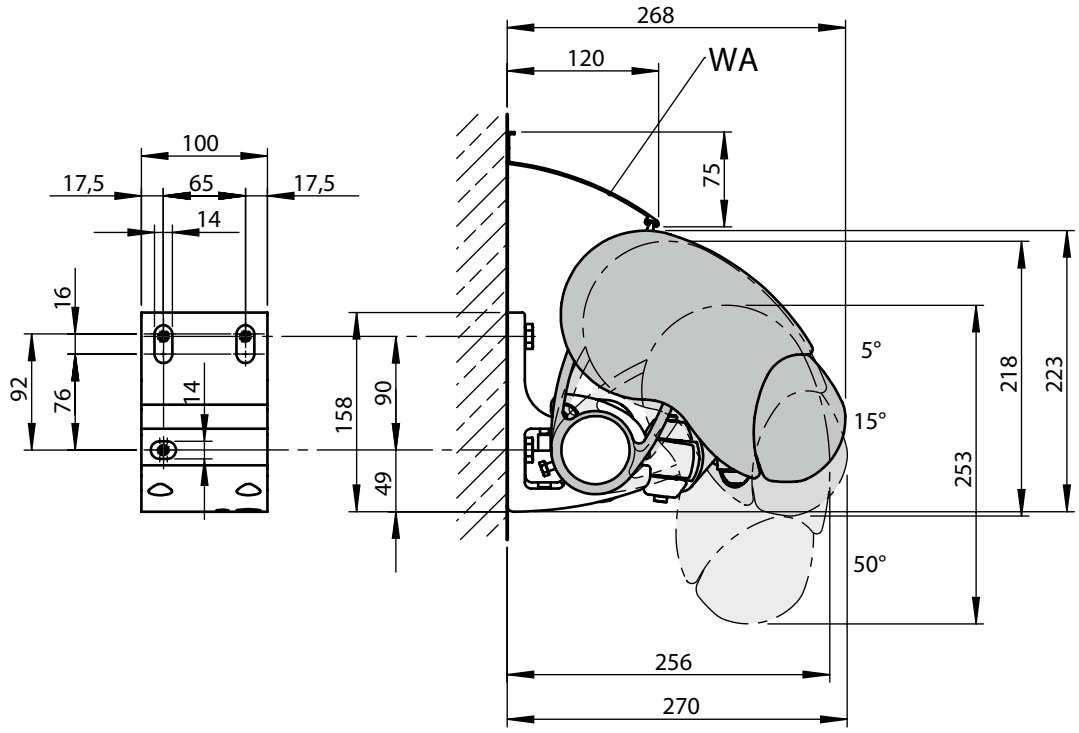

WA = wall sealing profile

dimensions in mm

Bracket fixture range for awnings with 2 folding arms

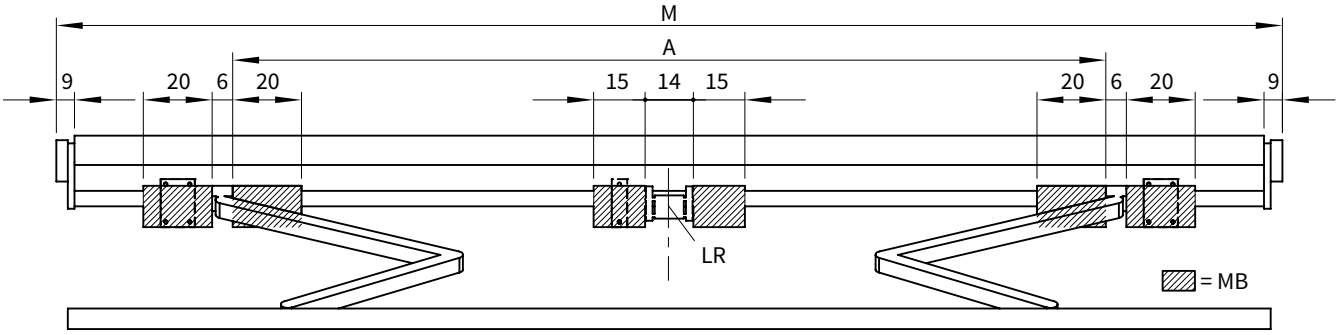

dimensions in cm

M [cm]	SB →	260	310	360	410	460	510	560	610	660
	ZB →	174—260	261—310	311—360	361—410	411—460	461—510	511—560	561—610	611—660

H [cm] ↓	A [cm]								
150	154*	220	250	280	320	390	425	460	500
200	215**	204*	250	280	320	390	425	460	500
250	–	265**	254*	280	320	390	425	460	500
300	–	–	315**	304*	320	390	425	460	500
350	–	–	–	365**	370*	390	425	460	500
400	–	–	–	–	404**	425*	425	460	–

dimensions in cm

	BHT ↓	HT ↓	HT ↓
W	45 mm	–	1
	100 mm	2	2
DE	45 mm	–	1
	90 mm	2	2
DA	90 mm	2	3

If the brackets cannot be positioned in accordance with this table, make sure the actual measurements are noted on the order form!

* = Coupled units are only available with a junction roller in the standard widths, in the case of other widths please ask us.

** = Please note the minimum widths! In the case of small awnings the brackets can only be fitted inside the arms, i.e. the position denoted by measurement **A**.

A = arm position
BHT = bracket width
DA = eaves fixture
DE = top fixture
H = projection
HT = no. of brackets
LR = a rolltex bearing with accompanying bracket is always placed under a central seam (depends on the awning size)
M = awning width
MB = bracket fixture range
SB = standard width
W = face fixture
ZB = intermediate width

Bracket fixture range for awnings with 3 folding arms

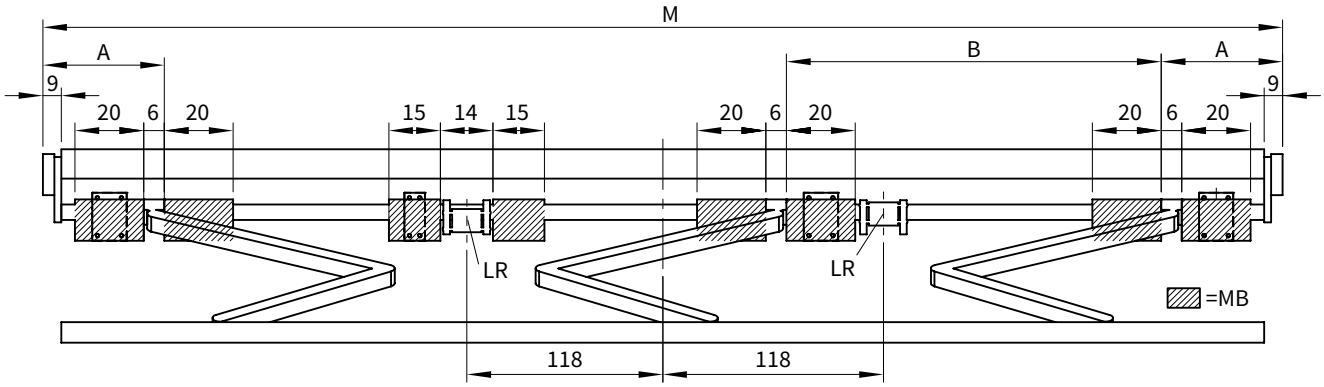

M [cm]	SB →	710
	ZB →	661—710

H [cm] ↓	A [cm] ↓	B [cm] ↓
150	35	220
200	35	220
250	35	220
300	35	220
350	25	230
400	16.5*	228*

dimensions in cm

	BHT ↓	HT ↓
W	**45 mm**	1
	100 mm	3
DE	**45 mm**	1
	90 mm	3
DA	**90 mm**	4

If the brackets cannot be positioned in accordance with this table, make sure the actual measurements are noted on the order form!

* = Please note the minimum widths! Dimension **A** is only valid for standard arms!
Coupled units are not available with junction roller.

A = arm position
B = arm position
BHT = bracket width
DA = eaves fixture
DE = top fixture
H = projection
HT = no. of brackets
LR = a rolltex bearing with accompanying bracket is always placed under a central seam (depends on the awning size)
M = awning width
MB = bracket fixture range
SB = standard width
W = face fixture
ZB = intermediate width

Spot lighting

front profile
with integrated halogen
light sources –
adjustable vertically
through 90°

Spotlight distribution

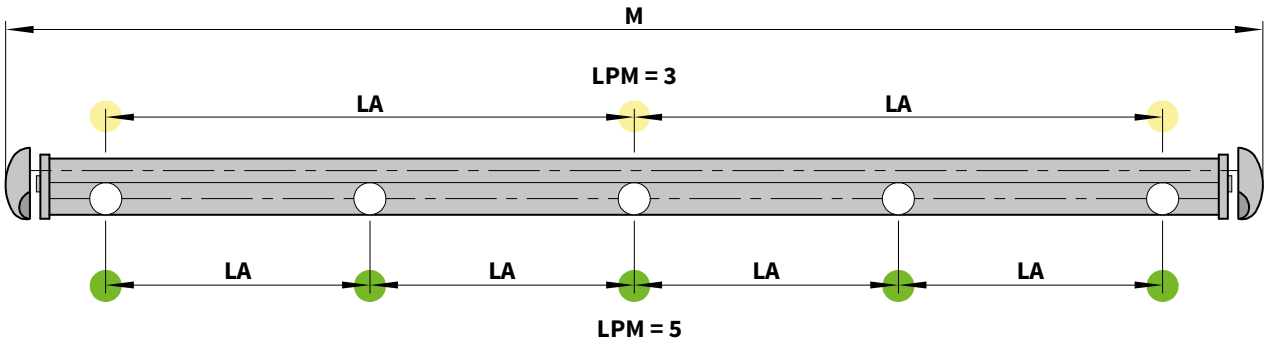

Lamp quantity and separation at different awning widths

	M [cm]									
	195 — 260	261 — 310	311 — 360	361 — 410	411 — 460	461 — 510	511 — 560	561 — 610	611 — 660	661 — 710
LPM	**3**				**5**					
LA [cm]	86	111	136	161	82	105	115	125	135	135

M = awning width
LPM = no. of spotlights
LA = spotlight separation

Technical specification

operating voltage	230 V, 50 Hz (2.5 A per transformer)
spotlight power output	35 W
light source	OSRAM Decostar 35S (12 V)
power supply cable	3 × 0.75 mm²
no. of transformers	1 piece in the case of 2 or 3 spotlights, 2 pieces in the case of 4 or 6 spotlights

Spotlight operation

	standard	optional
standard on/off switch	☑	–
radio-controlled dimmer	–	☑

Installation dimensions at varying awning pitches

Top fixture

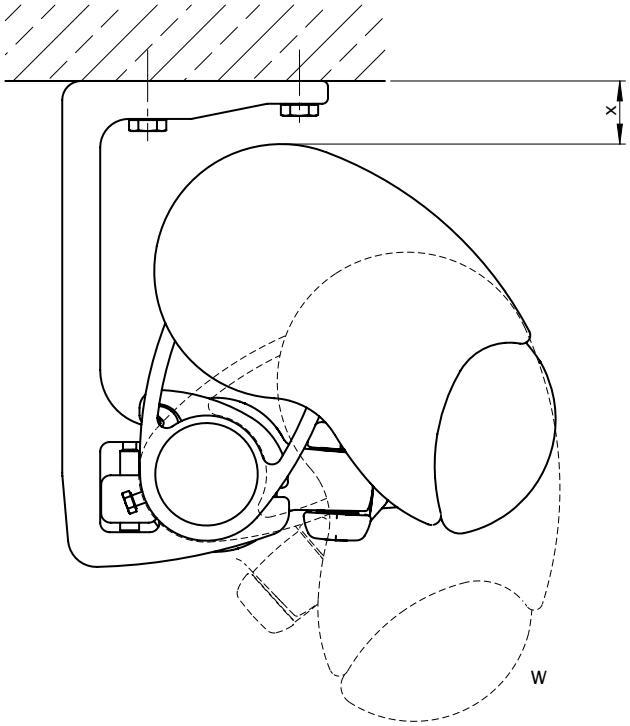

pitch (W)	approx. height in mm (X)
5°	33
10°	34
15°	38
20°	44
25°	50
30°	57
35°	65
40°	73
45°	81
50°	90

Face fixture

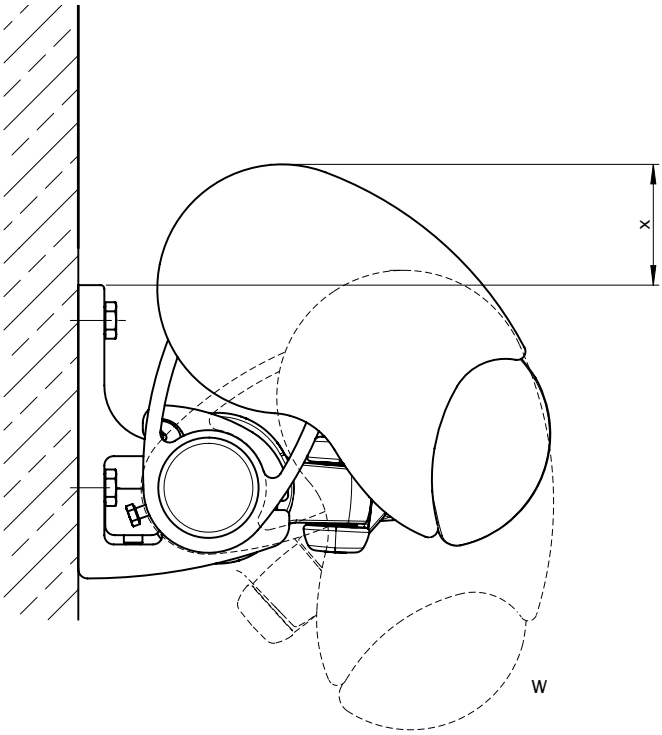

pitch (W)	approx. height in mm (X)
5°	65
10°	64
15°	60
20°	54
25°	48
30°	41
35°	34
40°	26
45°	17
50°	8